一般公差 General tolerance	角度公差 Angular tolerance ±[°]					寸法公差 Dimensional tolerance ±[mm]					
	短辺の長さ Length of short side	～10	10～50	50～100	100～			～6	6～30	30～120	120～300	300～1000	1000～
精	f	1	0.5	0.3	0.1	精	f	0.05	0.1	0.2	0.4	0.6	
中	m	1	0.5	0.3	0.1	中	m	0.1	0.3	0.5	0.7	1	
粗	v	3	1.5	1	0.5	粗	c	0.3	0.5	1	1.2	2	

図番 Drawing No. LS7-FB207-A18

ページ Page 1/1

改訂 Rev.	年月日 Date	改訂履歴 Revisions
C		

[Model No. Configuration]

LS7-302DWH-RYGNN+FB207

- Light Style: 3:3 Tiers
- Rated Voltage: 02:24V DC
- Body Color: D:Off-Dark Gray
- Mount: W:Direct Mount
- Wiring: H:Lead Wires
- LED Color: R:Red, Y:Amber, G:Green, N:Blank (Lens color from top to bottom)
- TOKUPO No.

Front

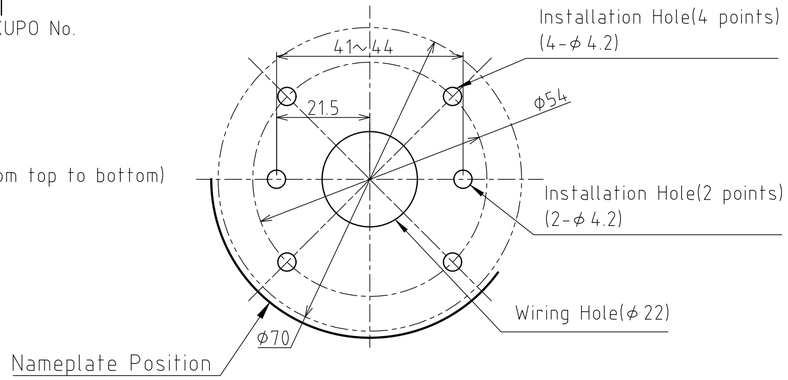

Fig.1 Installation Dimensional Drawing(1:1)

Wire Connection Example

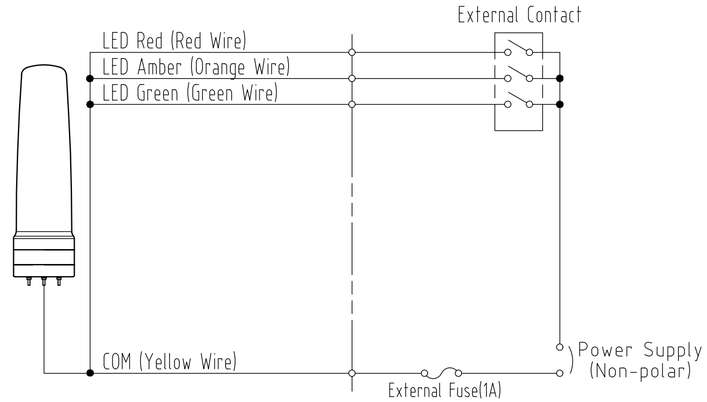

Open Collector(DC24V)

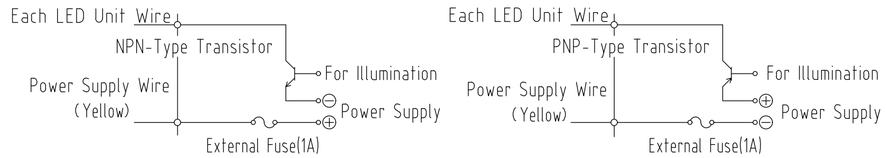

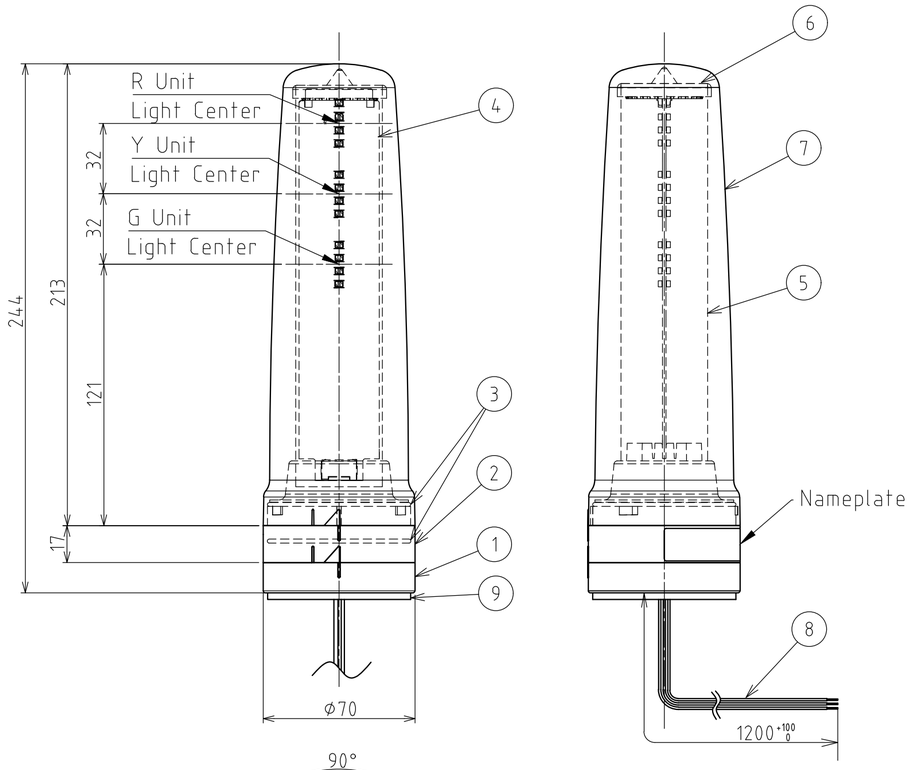

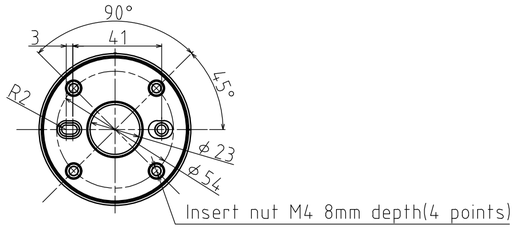

Chart1. Lead Wire Feature List

Lead Wire Color	Function
Red	LED Red
Orange	LED Amber
Green	LED Green
Yellow	Power supply wire
Blue	(No function)
White	(No function)

[Specifications]

Product Name		Signal Tower
Model		LS7-302DWH-RYGNN+FB207
Rated Voltage		24V DC
Operating Voltage Range		Rated Voltage ±10%
Signal Wire Current (Rated Current Consumption)	Typ.	R unit:20mA , Y Unit:30mA , G Unit:30mA
LED Use Quantity		8pcs. / 1 unit(Red·Yellow·Green)
Operating Ambient Temperature		-30℃ ～ +60℃
Operating Ambient Humidity		Less than90% (No condensation)
Mounting Location		Indoor only
Mounting Direction		Upright only
Protection Rating		IP 65 (Upright Position Only)
Vibration Proof		19.6m/s² JIS C 60068-2-6
Insulation Resistance		1MΩ or more measured between the terminals and chassis when 500VDC was applied.
Withstand Voltage		500VAC applied between the terminals and chassis for 1 minute without breaking insulation.
Mass		0.28kg
Luminosity		Red:more than 490mcd , Yellow:more than 1140mcd , Green:more than 940mcd
Conformity Standards		EMC Directive(EN61000-6-4, EN61000-6-2) RoHS Directive (EN IEC 63000)
Remarks		Conforms to the CE Requirements Conforms to the UKCA Requirements

Drawing Release '24.08.02 出図 PATLITE

[NOTE]

1. To ensure the rated protection rating, the product installation (φ70), as indicated in Fig.1, is to be limited to the mounting hole (6 locations) and harness through-hole (1 location) installation.
2. Unused wires should be covered with insulation tape or by other methods of insulation.

番号 No.	部品名 Part Name	数量 Qty.	記事 Remarks
9	Water Proof Sheet	1	CR Sponge
8	Lead Wire Assembly	1	UL1007 AWG22
7	Outer Cover	1	PC
6	Cap	1	Silicone
5	Inner Lens	1	PC
4	LED PCB Assembly	1	LED Color:Red,Amber,Green
3	O-Ring	2	Silicone
2	Base	1	Heat-Resistant ABS (Off-Dark Gray/Off-White)
1	Mount	1	Heat-Resistant ABS (Off-Dark Gray/Off-White)

機種 Model	LS7-302DWH-RYGNN+	特注No. S.P.No.	FB207	設計 Dgn.by Y.Mikawa 11.Oct.'11	製図 Drn.by S.Takei 25.Aug.'23
図名 Name	Specifications			検図 Chk.by T.Ishizaki 25.Aug.'23	承認 App.by T.Motoshita 25.Aug.'23
品目コード Part No.		尺度 Scale 1:2	三角法 3rd Angle P.	単位 Unit mm	株式会社パトライト PATLITE Corporation

Ver.2.2 A2